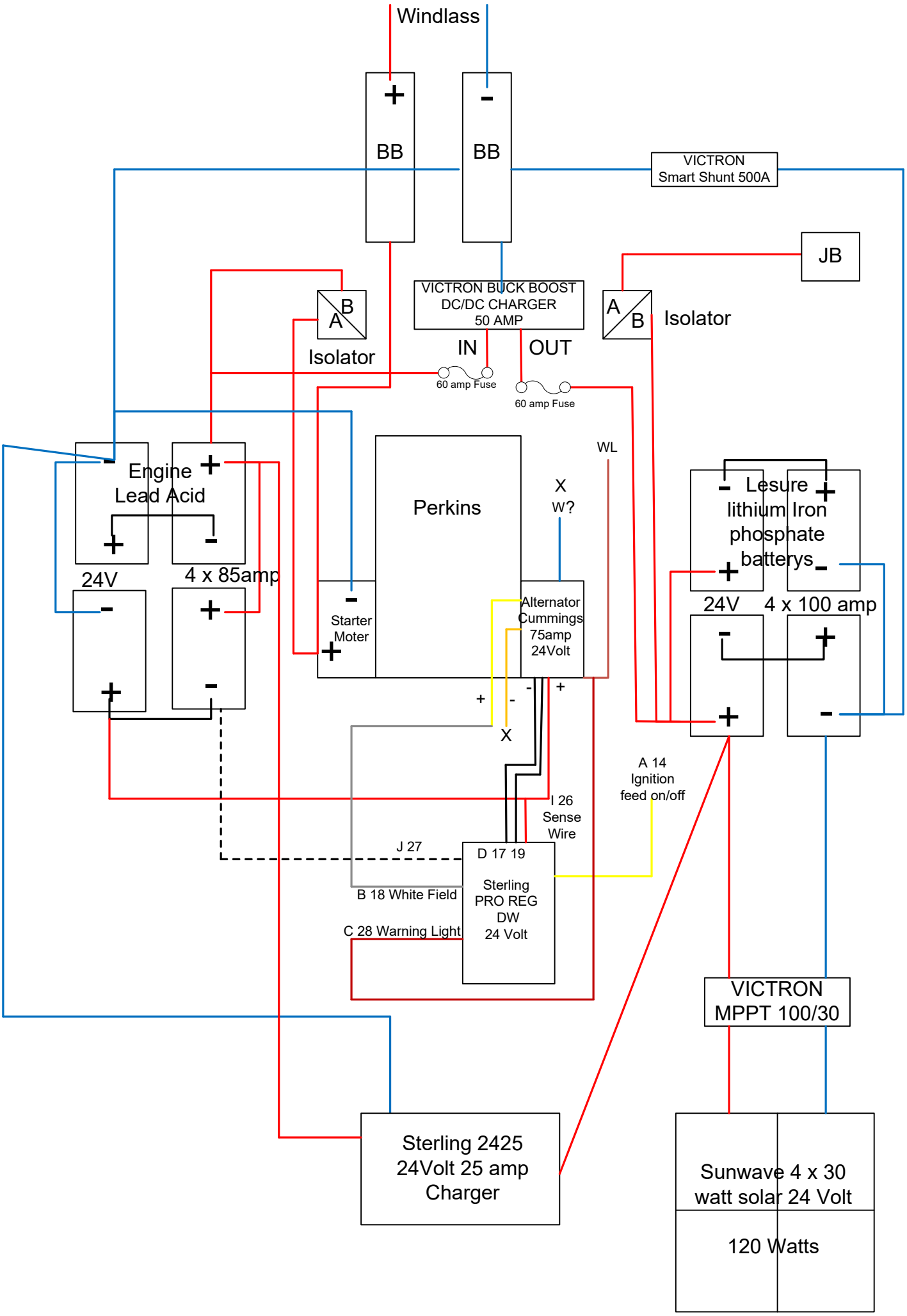
Windlass
+
BB
-
BB
VICTRON
Smart Shunt 500A
JB
VICTRON BUCK BOOST
DC/DC CHARGER
50 AMP
A
B
Isolator
IN
OUT
60 amp Fuse
60 amp Fuse
A
B
Isolator
Engine
Lead Acid
24V
4 x 85amp
Perkins
WL
X
W?
Starter
Moter
Alternator
Cummings
75amp
24Volt
Lesure
lithium Iron
phosphate
batterys
24V
4 x 100 amp
X
A 14
Ignition
feed on/off
I 26
Sense
Wire
J 27
D 17 19
Sterling
PRO REG
DW
24 Volt
B 18 White Field
C 28 Warning Light
VICTRON
MPPT 100/30
Sterling 2425
24Volt 25 amp
Charger
Sunwave 4 x 30
watt solar 24 Volt
120 Watts