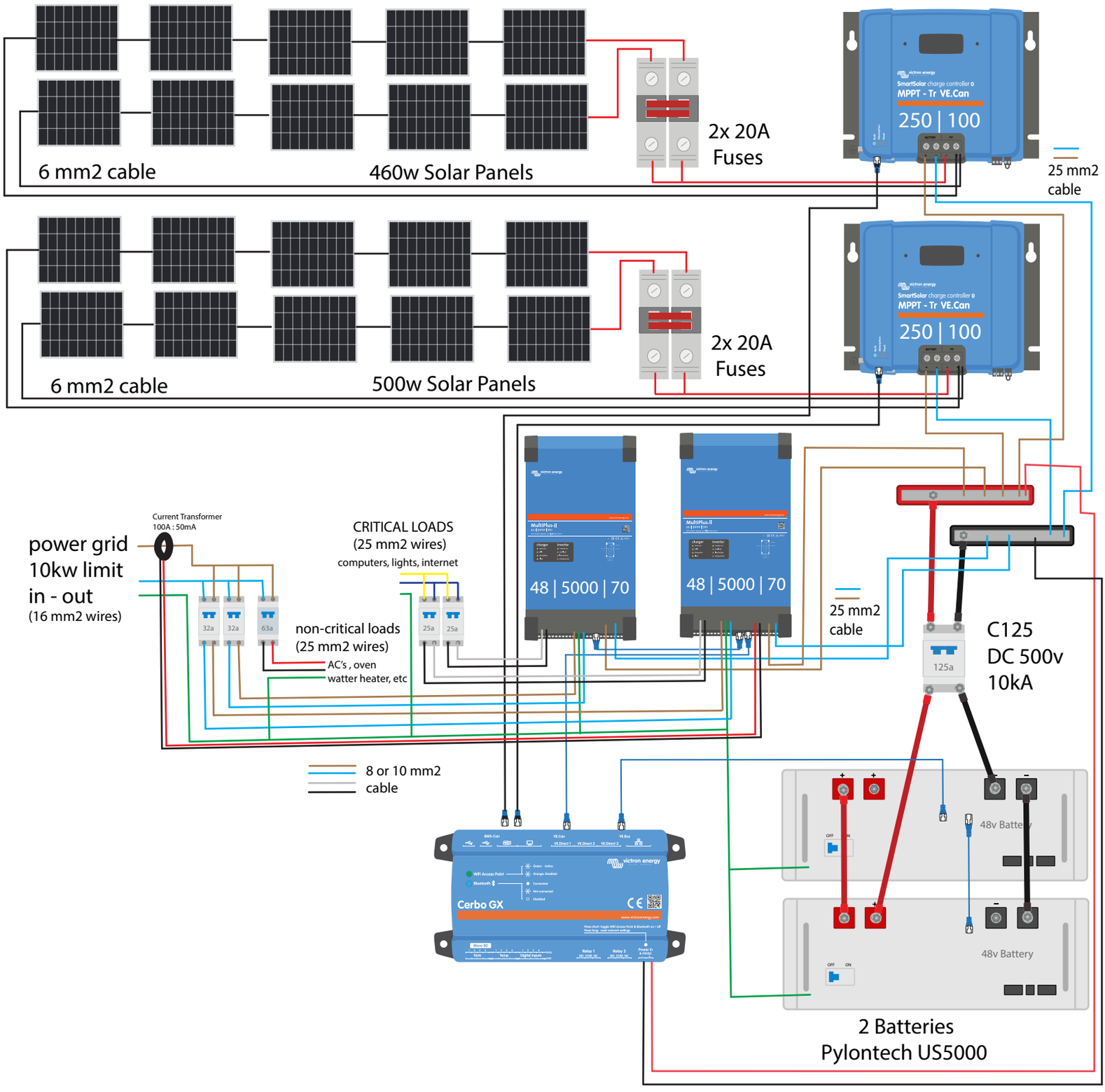
6 mm2 cable
460w Solar Panels
2x 20A
Fuses
SmartSolar charge controller
MPPT - Tr VE.Can
250 | 100
25 mm2
cable
6 mm2 cable
500w Solar Panels
2x 20A
Fuses
SmartSolar charge controller
MPPT - Tr VE.Can
250 | 100
Current Transformer
100A : 50mA
power grid
10kw limit
in - out
(16 mm2 wires)
CRITICAL LOADS
(25 mm2 wires)
computers, lights, internet
32a
32a
63a
25a
25a
non-critical loads
(25 mm2 wires)
AC's , oven
watter heater, etc
48 | 5000 | 70
48 | 5000 | 70
25 mm2
cable
125a
C125
DC 500v
10kA
8 or 10 mm2
cable
Cerbo GX
48v Battery
48v Battery
2 Batteries
Pylontech US5000