REC BMS with 1 2P4S 608A Battery

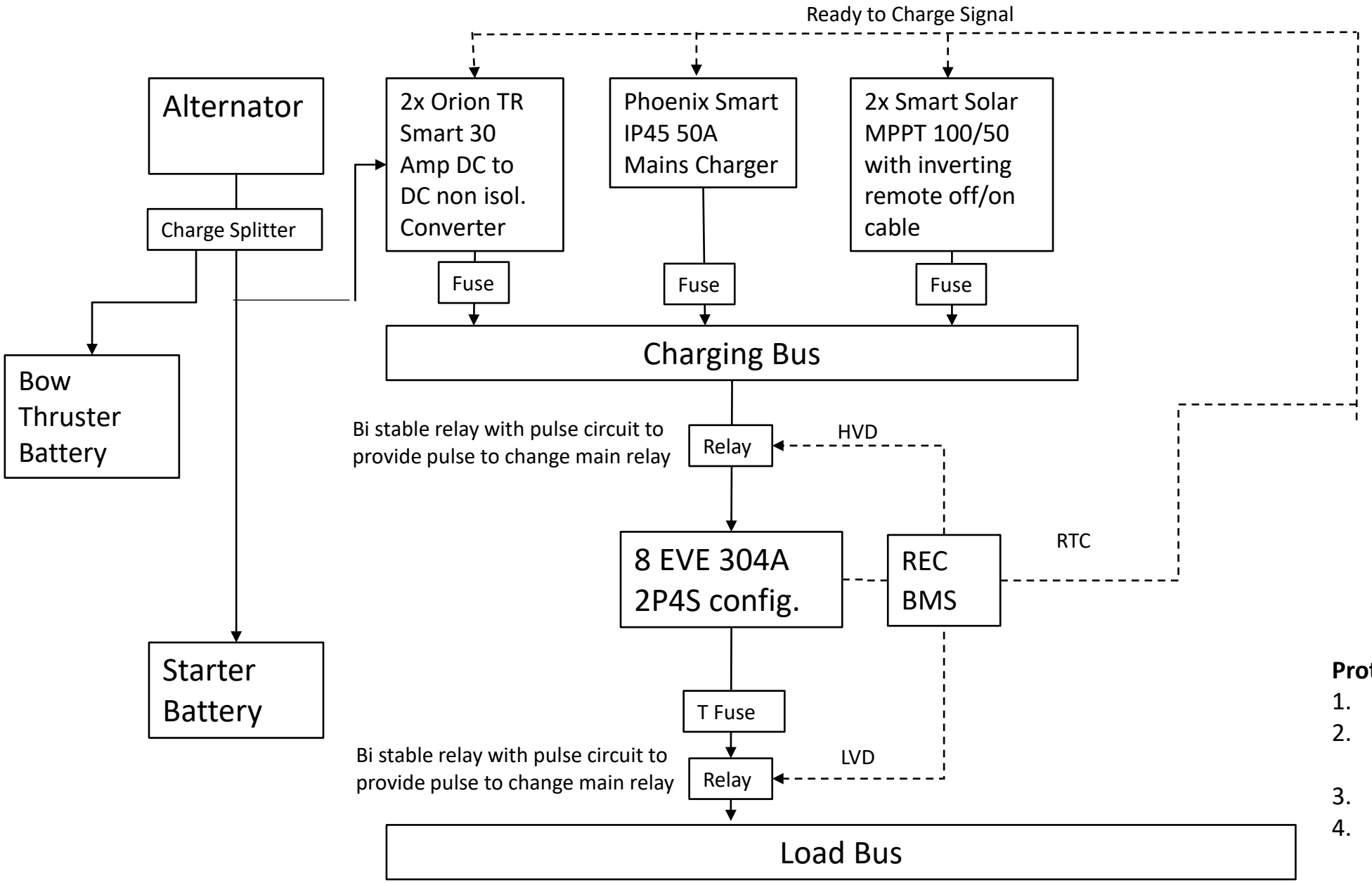

Charging sources with RTC enabled and set to max 14.2v

Protection:

1. RTC signal from BMS
2. Victron Components set to charge to 14.2 max
3. BMS HVD if any cell =3.6v
4. LVD is any cell <2.8v