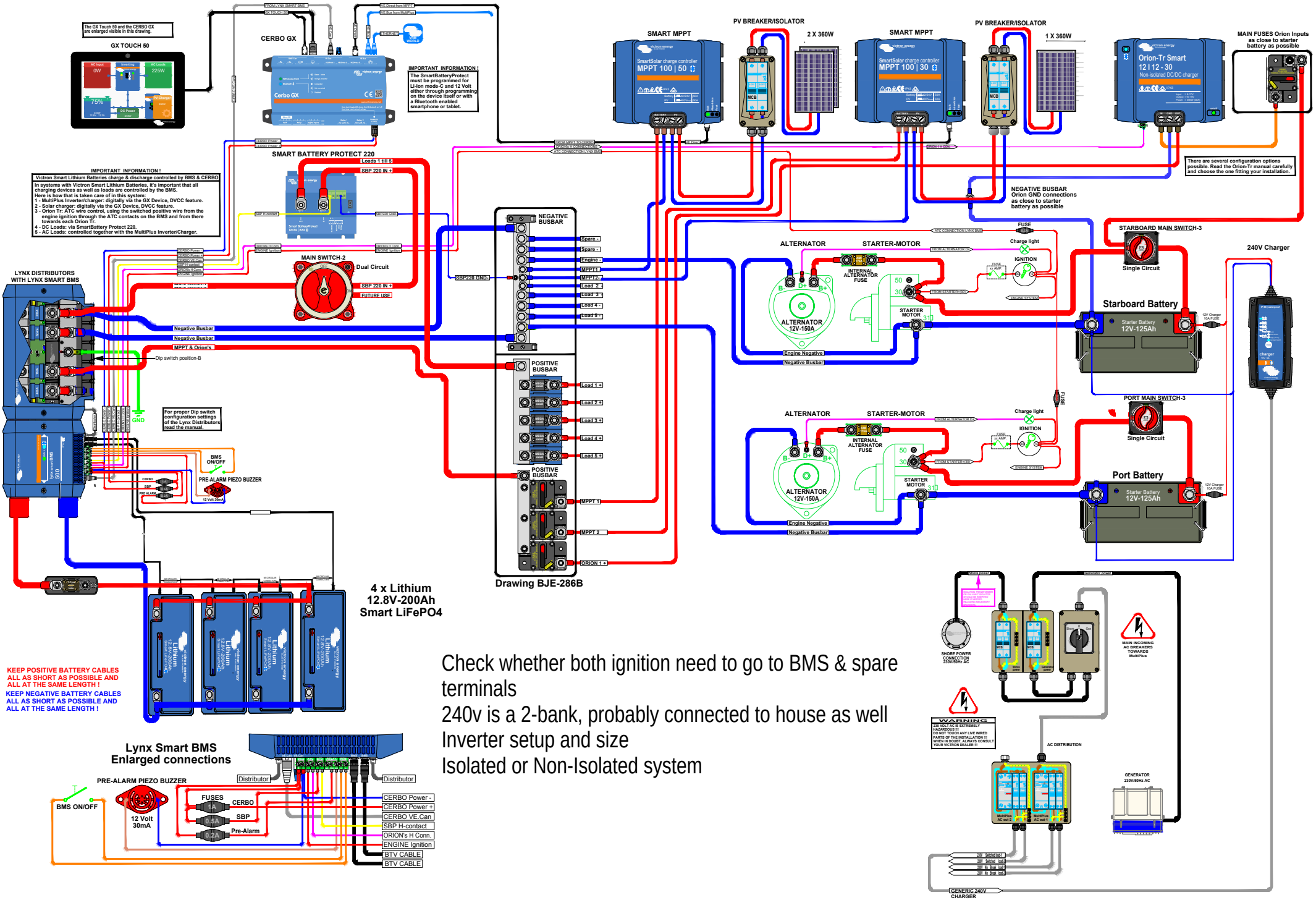

Check whether both ignition need to go to BMS & spare terminals

240v is a 2-bank, probably connected to house as well

Inverter setup and size

Isolated or Non-Isolated system