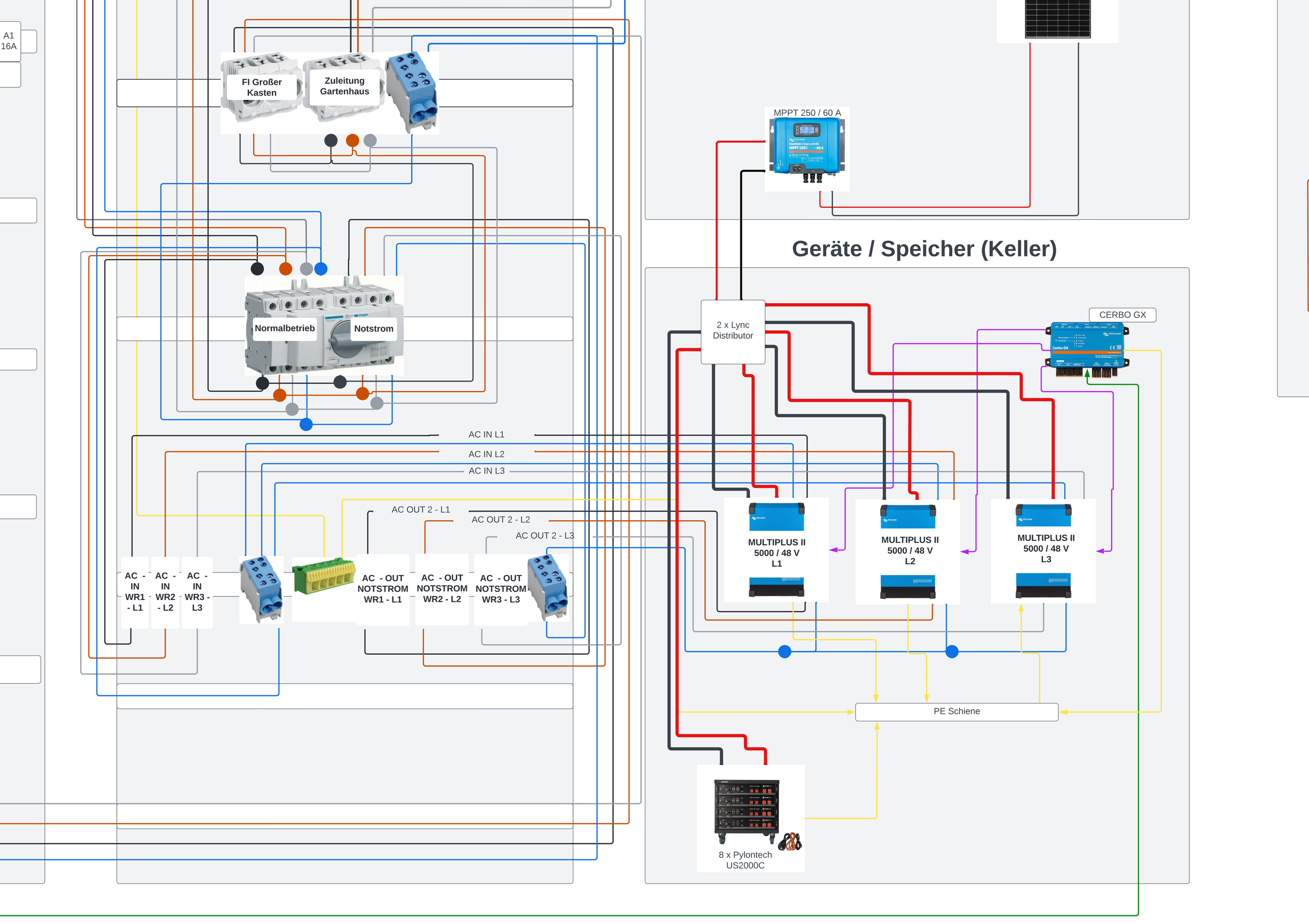
A1
16A
FI Großer Kasten
Zuleitung Gartenhaus
MPPT 250 / 60 A
Geräte / Speicher (Keller)
Normalbetrieb
Notstrom
2 x Lync Distributor
CERBO GX
AC IN L1
AC IN L2
AC IN L3
AC OUT 2 - L1
AC OUT 2 - L2
AC OUT 2 - L3
AC - IN WR1 - L1
AC - IN WR2 - L2
AC - IN WR3 - L3
AC - OUT NOTSTROM WR1 - L1
AC - OUT NOTSTROM WR2 - L2
AC - OUT NOTSTROM WR3 - L3
MULTIPLUS II 5000 / 48 V L1
MULTIPLUS II 5000 / 48 V L2
MULTIPLUS II 5000 / 48 V L3
PE Schiene
8 x Pylontech US2000C