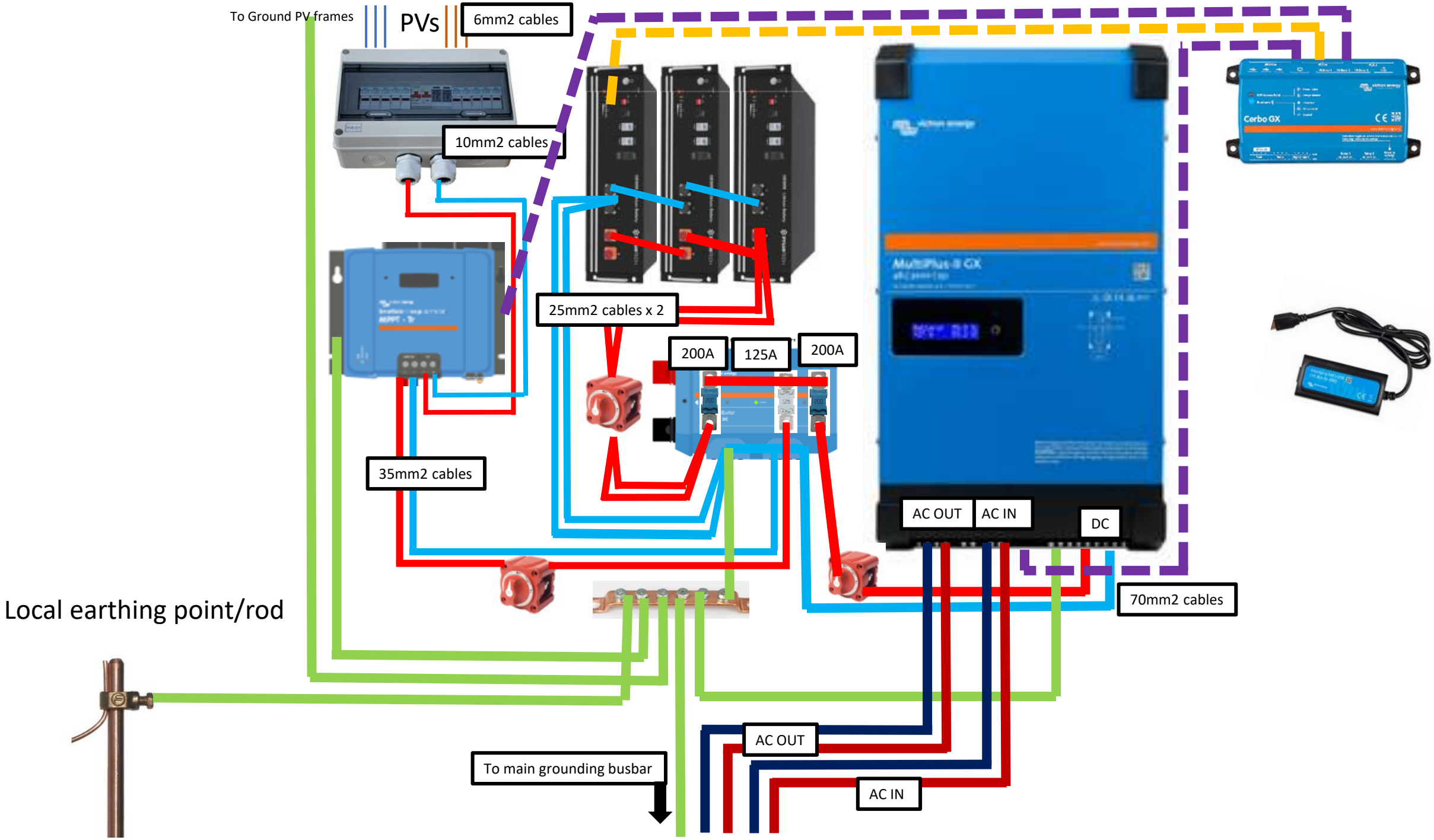
To Ground PV frames
PVs
6mm2 cables
10mm2 cables
25mm2 cables x 2
200A
125A
200A
35mm2 cables
AC OUT
AC IN
DC
70mm2 cables
Local earthing point/rod
To main grounding busbar
AC OUT
AC IN
Cerbo GX

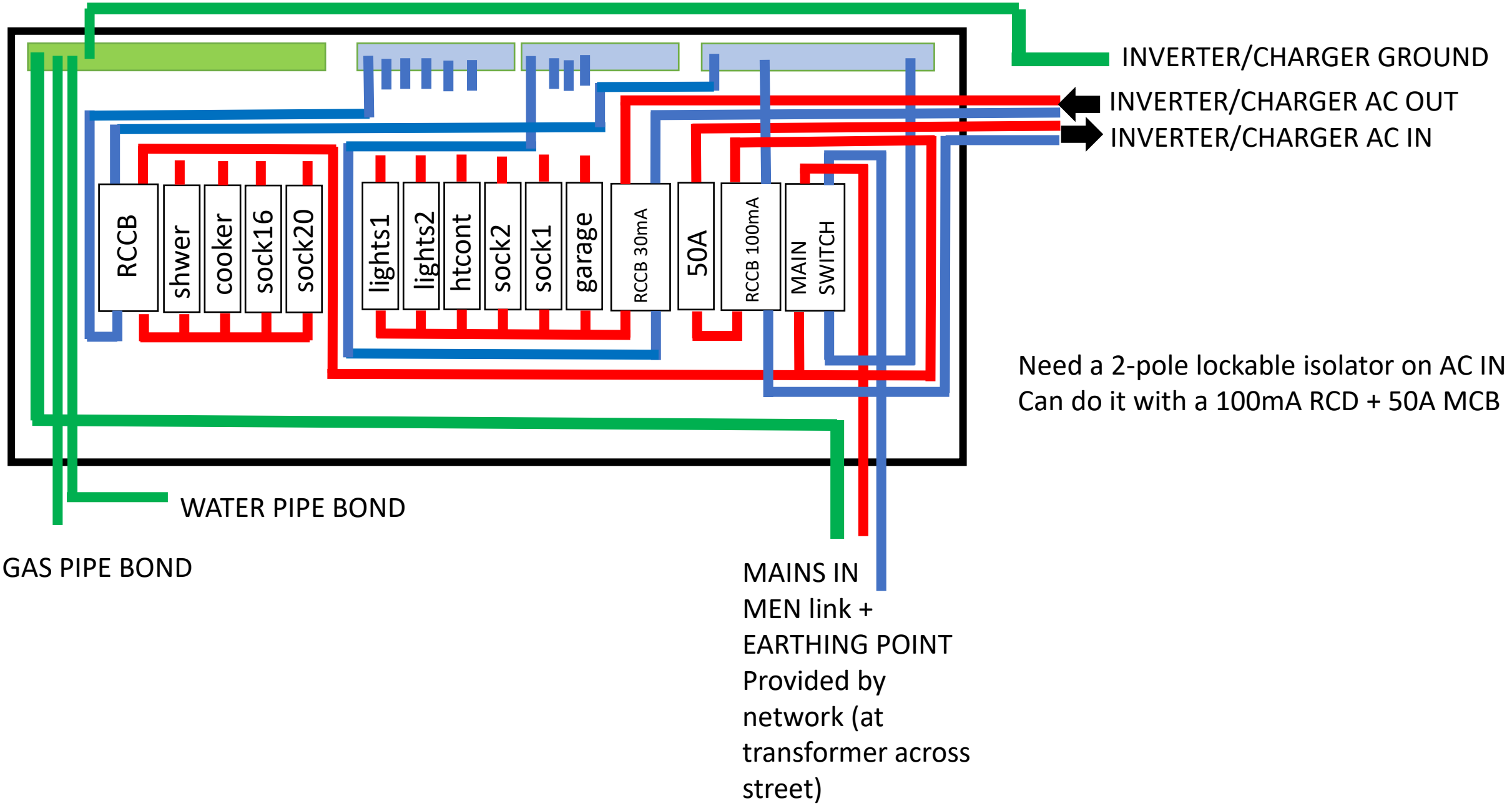
INVERTER/CHARGER GROUND
INVERTER/CHARGER AC OUT
INVERTER/CHARGER AC IN
RCCB
shwer
cooker
sock16
sock20
lights1
lights2
htcont
sock2
sock1
garage
RCCB 30mA
50A
RCCB 100mA
MAIN SWITCH
Need a 2-pole lockable isolator on AC IN
Can do it with a 100mA RCD + 50A MCB
WATER PIPE BOND
GAS PIPE BOND
MAINS IN
MEN link +
EARTHING POINT
Provided by
network (at
transformer across
street)